K150	Peso Kg/m Weight Kg/m	4.90	Rt °C/W	0.90	Lung. campione mm Sample length mm	150

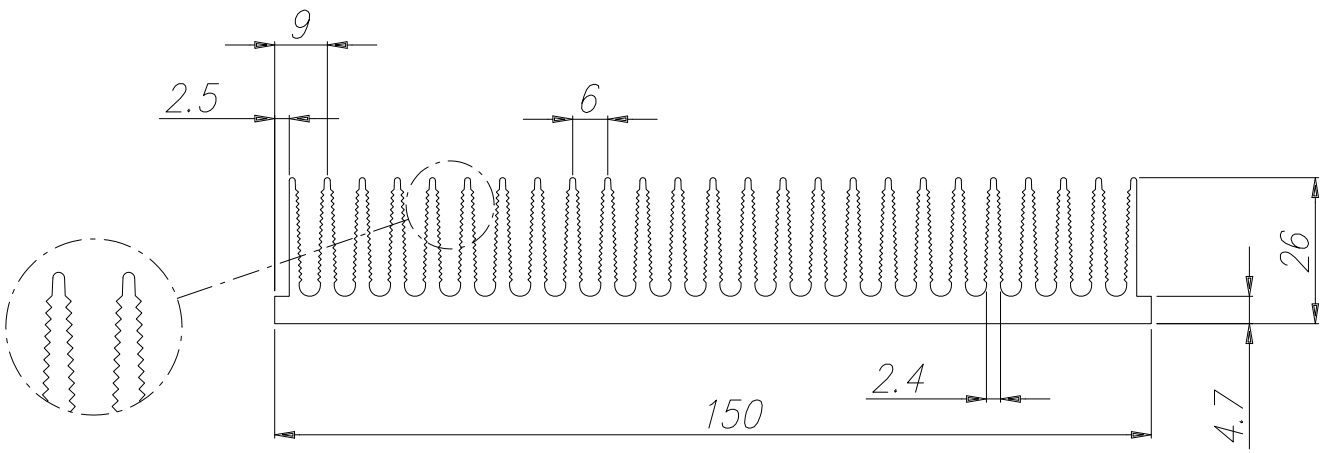

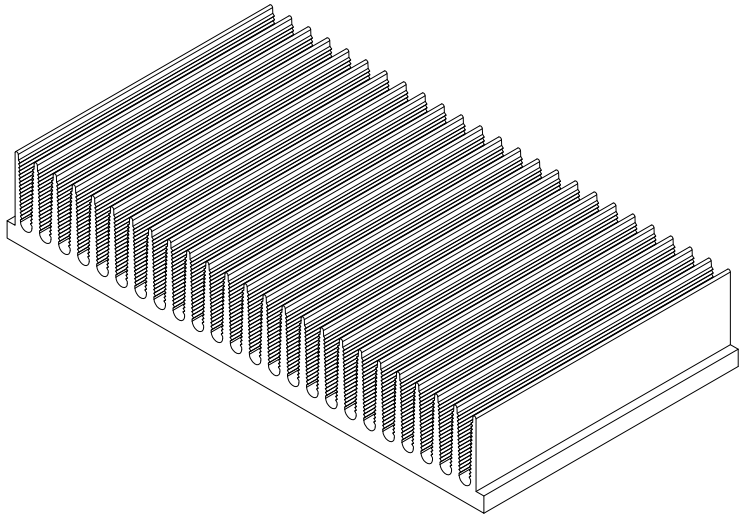

TECNOAL
BOLOGNA - ITALY

TECNOAL
MECHANICAL ENGINEERING FOR ELECTRONICS

ATD Elektronik s.r.o.
Luženice 10
344 01 Domažlice
Tel.: 379 723 915
Fax: 379 725 868
www.atd-elektronik.cz
info@atd-elektronik.cz

COMPANY
WITH QUALITY MANAGEMENT
SYSTEM CERTIFIED BY DNV
ISO 9001 : 2000

Notes:

ATD ELEKTRONIK s.r.o.