I 125F

Peso Kg/m
Weight Kg/m 2.05

Dimension H on request
Dimension L on request

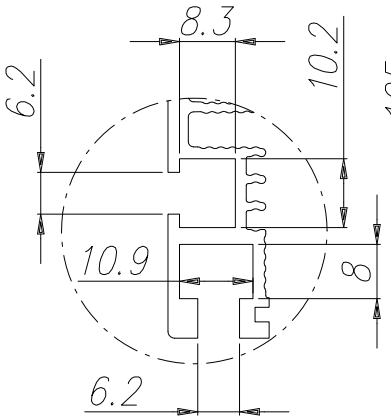

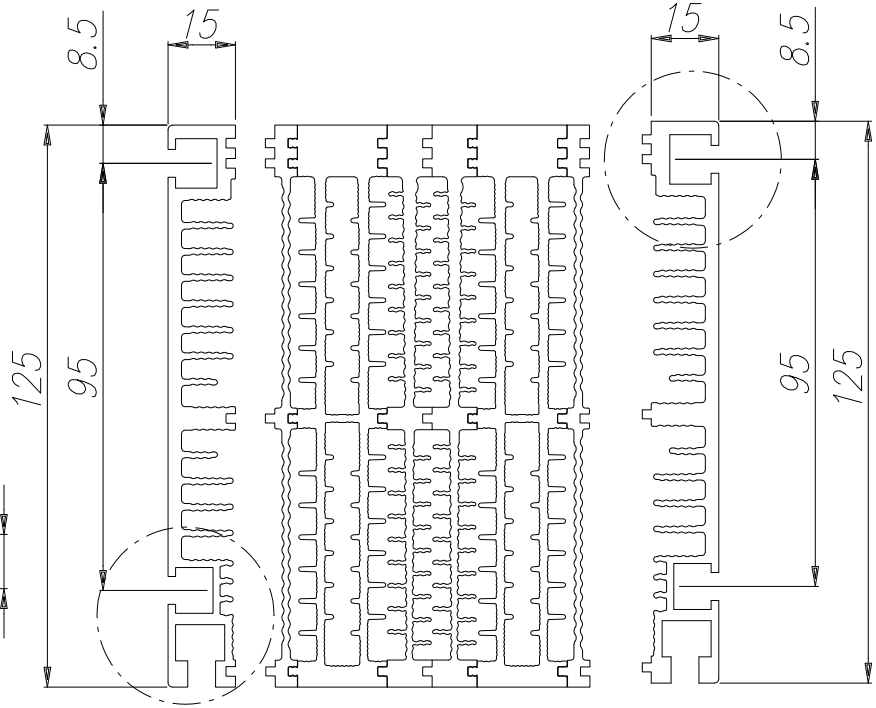

I 125M

Peso Kg/m
Weight Kg/m 2.10

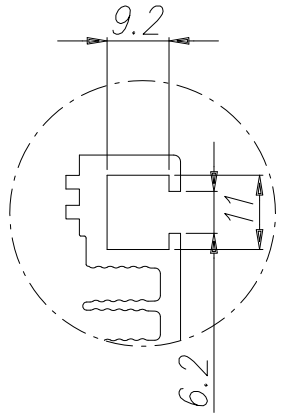

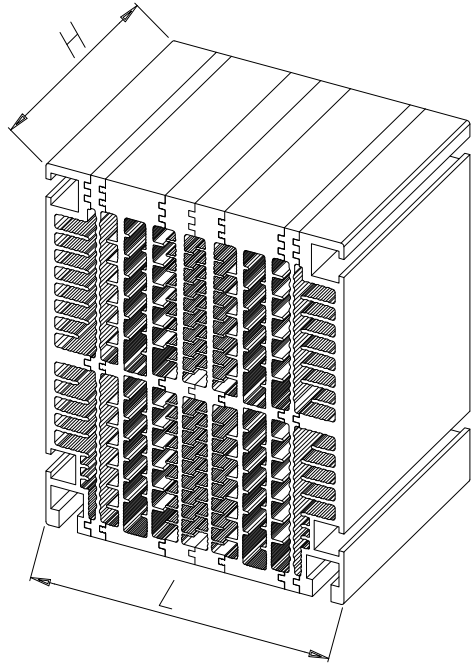

TECNOAL
BOLOGNA - ITALY

TECNOAL
MECHANICAL ENGINEERING FOR ELECTRONICS

ATD Elektronik s.r.o.
Luženice 10
344 01 Domažlice
Tel.: 379 723 915
Fax: 379 725 868
www.atd-elektronik.cz
info@atd-elektronik.cz

COMPANY
WITH QUALITY MANAGEMENT
SYSTEM CERTIFIED BY DNV
ISO 9001

Notes:

ATD ELEKTRONIK s.r.o.