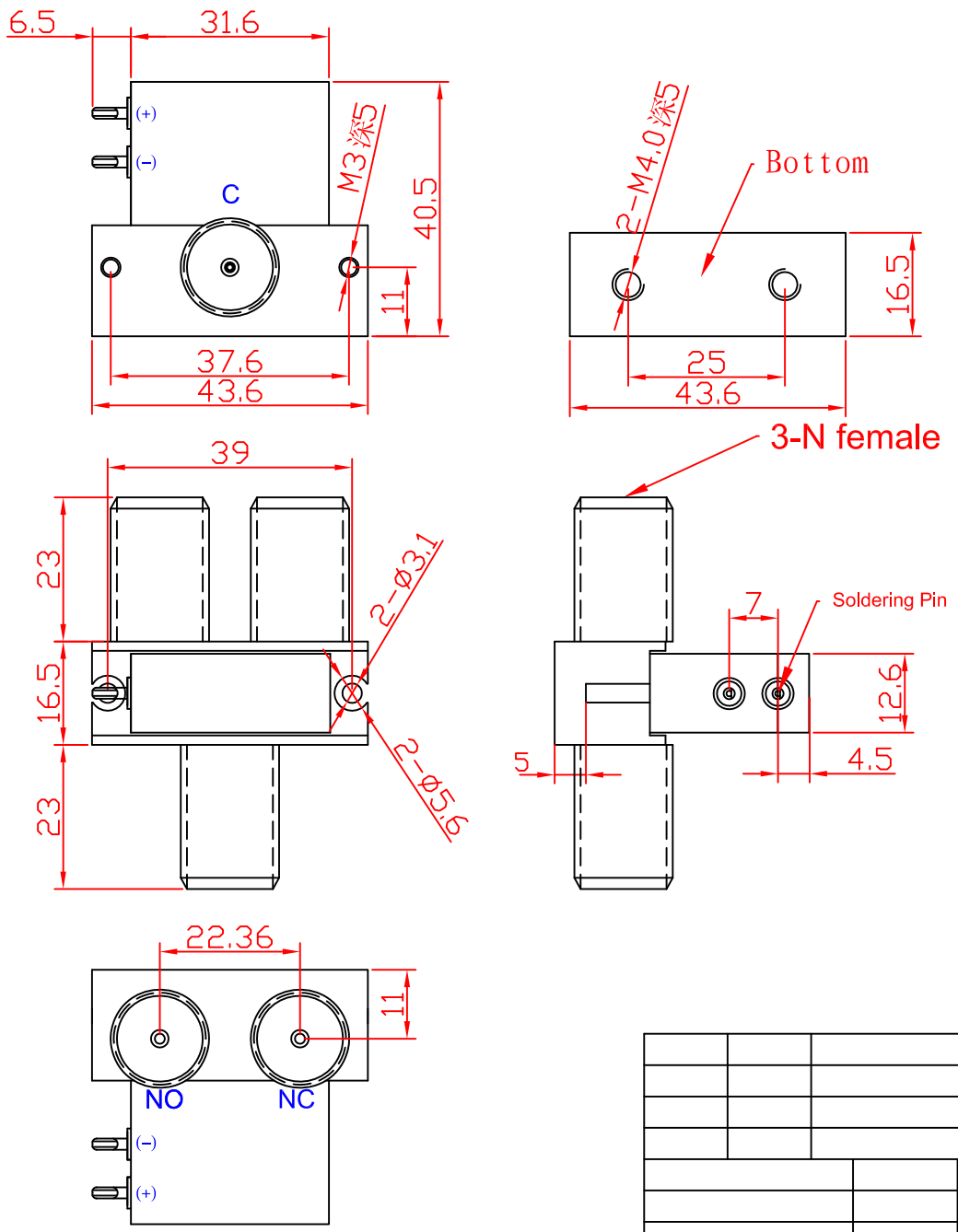

RF SPEC.

1. Frequency Range:DC-3GHZ
2. Impedance:50 ohm

	DC-1GHZ	1-2GHZ	2-3GHZ
3. Insertion Loss	<0.10dB	<0.15dB	<0.2dB
4. VSWR	<1.15	<1.20	<1.20
5. Isolation	>80dB	>70dB	>60dB
6. Power Handing:	>150w	>100w	>85w

7. DC Supply: DC12V/185mA DC24V/90mA
8. Life cycling>1000000
9. Tempreture range: -30 - +75 degree
10. RF Interface: SMA female

					SPDT Failsafe Type DC-3GHZ			C7-1203
				2011-5-17	A	B	C	1:1
								1

Beijing CTE Communication